customer.service@mfgs.com.au
www.mfgs.com.au

FRAMELESS GLASS CANOPY HARDWARE INDEX

7.1 Austvision Canopy Hardware Kits & Parts

7.2 Austvision Heavyweight Spider Canopy

7.3 Austvision Lightweight Spider Canopy

INTENTIONALLY

LEFT

BLANK

MFGS
MODERN FRAMELESS GLASS SYSTEMS
customer.service@mfgs.com.au
www.mfgs.com.au

FRAMELESS GLASS CANOPY HARDWARE

C1-10/12
C2-10/12

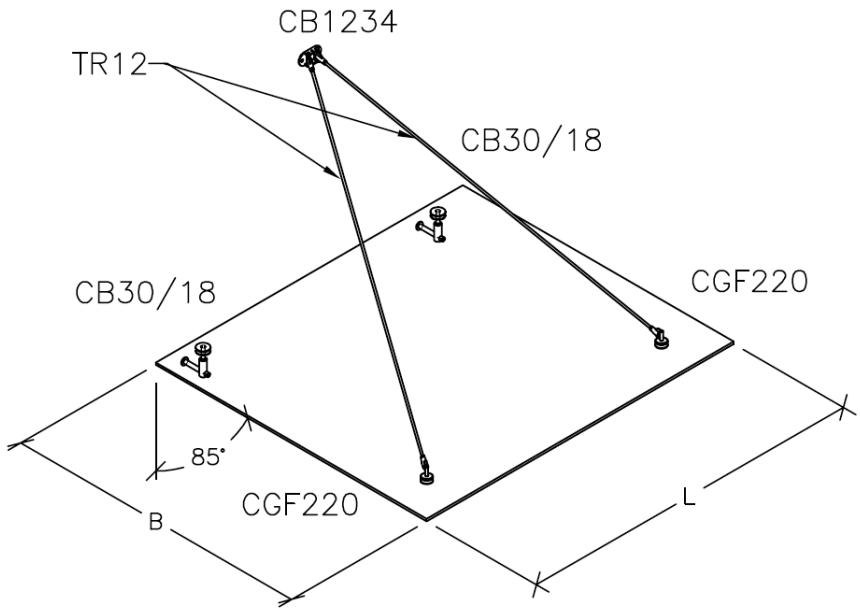

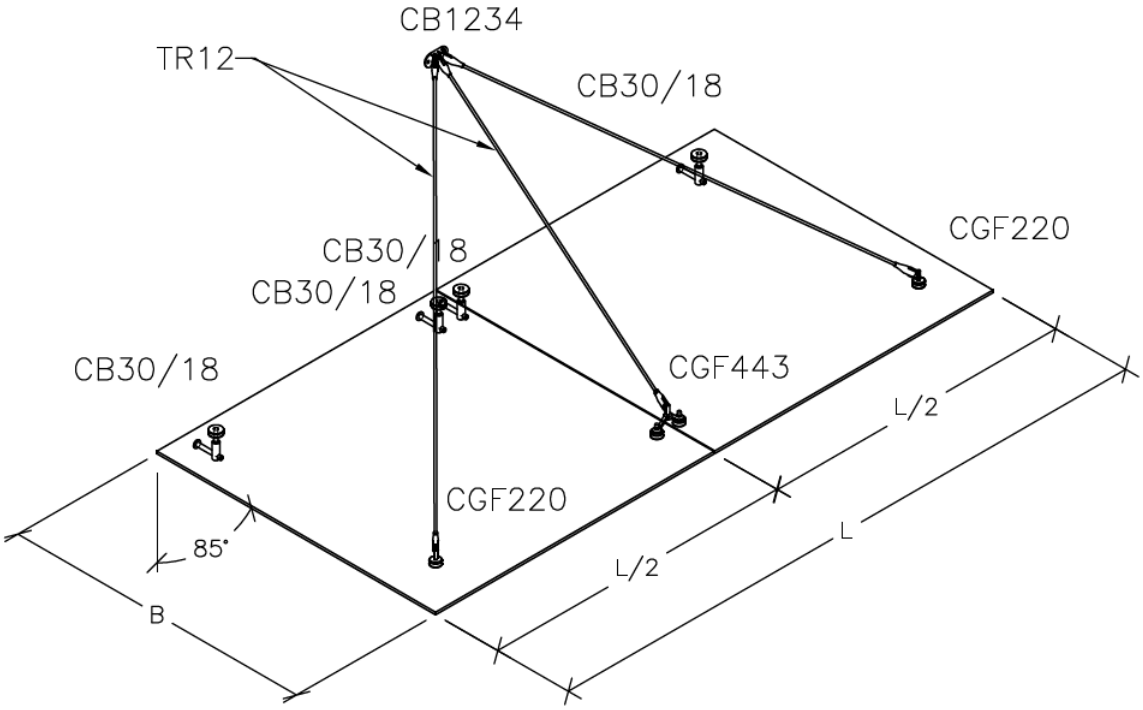

DETAILS

Austvision Frameless Glass Canopy Hardware Kits

- Suitable for 10/12mm toughened glass (not included with kit)
- C1-10 (L= 1500mm & B = 1400mm) for 10mm glass
- C1-12 (L = 1700mm & B = 1600mm) for 12mm glass
- C2-10 (L = 2600mm & 1400mm) for 10mm glass
- C2-12 (L = 3000mm & 1600mm) for 12mm glass
- Email luke.pritchard@mfgs.com.au to order or discuss your requirements

FINISHES

- Satin

Base material: 316 Stainless Steel

customer.service@mfgs.com.au
www.mfgs.com.au

MODERN FRAMELESS GLASS SYSTEMS

C3-10/12 C4-10/12

FRAMELESS GLASS CANOPY HARDWARE

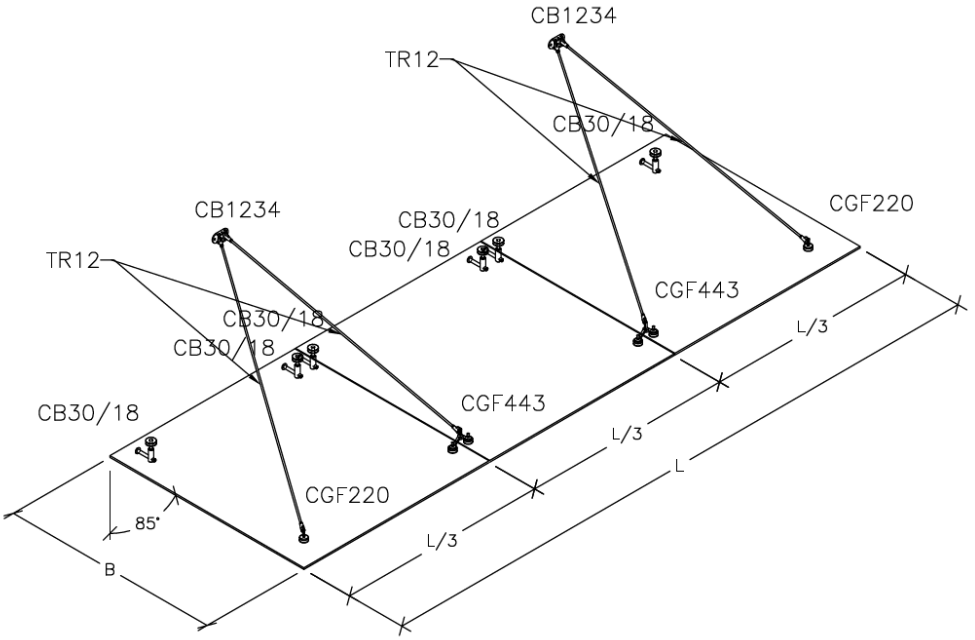

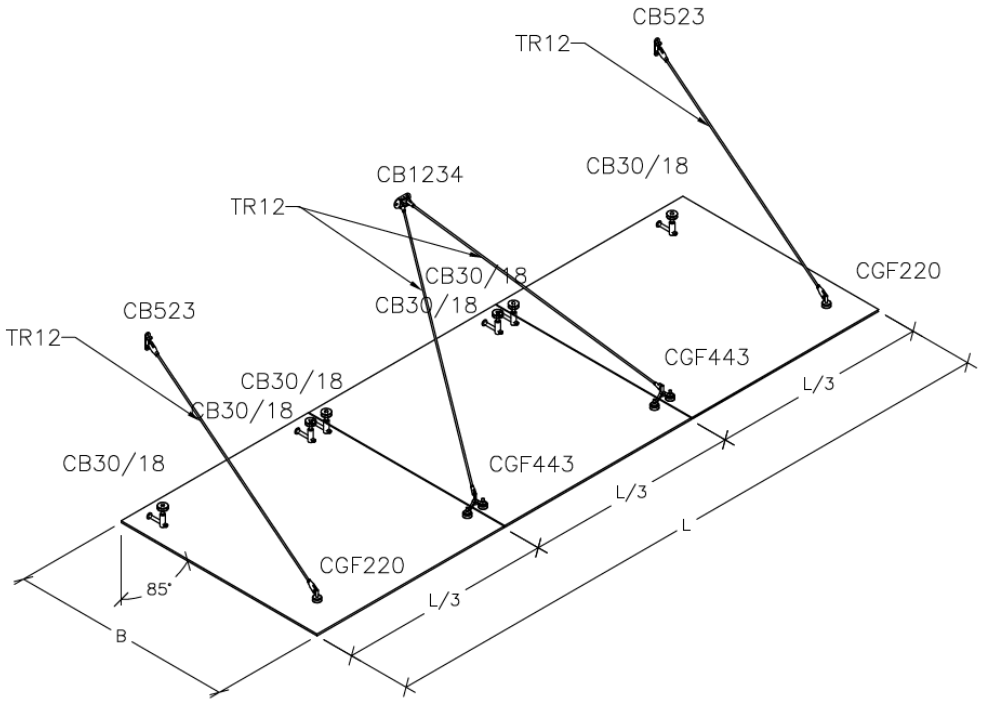

DETAILS

Austvision Frameless Glass Canopy Hardware Kits

- Suitable for 10/12mm toughened glass (not included with kit)
- C3-10 (L= 3700mm & B = 1400mm) for 10mm glass
- C3-12 (L = 4300mm & B = 1600mm) for 12mm glass
- C4-10 (L = 3700mm & 1400mm) for 10mm glass
- C4-12 (L = 4300mm & 1600mm) for 12mm glass
- Email luke.pritchard@mfgs.com.au to order or discuss your requirements

FINISHES

- Satin

Base material: 316 Stainless Steel

MODERN FRAMELESS GLASS SYSTEMS
customer.service@mfgs.com.au
www.mfgs.com.au

FRAMELESS GLASS CANOPY HARDWARE — CB30-18

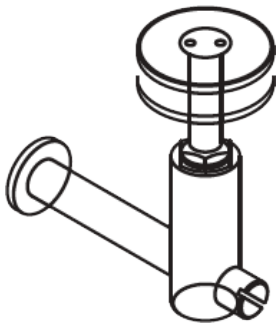

Product Image

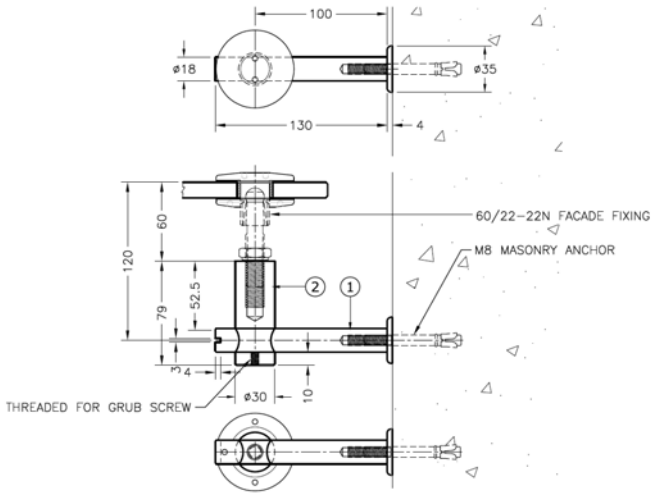

Dimensions

DETAILS

One Way Glass to Wall Bracket

- Suitable for 10/12mm toughened glass & TR12 tie rods
- Ø27mm Hole required in glass
- Email luke.pritchard@mfgs.com.au to order or discuss your requirements

FINISHES

- Satin

Base material: 316 Stainless Steel

FRAMELESS GLASS CANOPY HARDWARE — CB523

Product Image

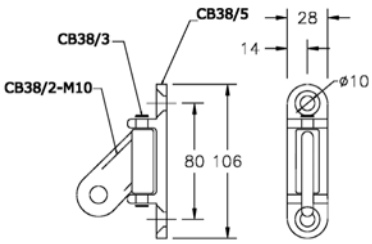

Dimensions

DETAILS

One Way Wall to Tie Rod Bracket

- Suitable for TR12 tie rods
- Email luke.pritchard@mfgs.com.au to order or discuss your requirements

FINISHES

- Satin

Base material: 316 Stainless Steel

customer.service@mfgs.com.au
www.mfgs.com.au

MFGS
MODERN FRAMELESS GLASS SYSTEMS

CB1234 FRAMELESS GLASS CANOPY HARDWARE

Product Image

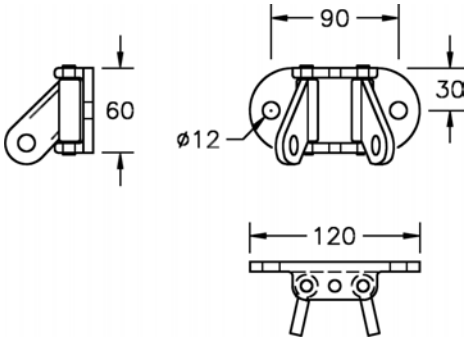

Dimensions

DETAILS

Two Way Wall to Tie Rod Bracket

- Suitable for TR12 tie rods
- Email luke.pritchard@mfgs.com.au to order or discuss your requirements

FINISHES

- Satin

Base material: 316 Stainless Steel

CGF220 FRAMELESS GLASS CANOPY HARDWARE

Product Image

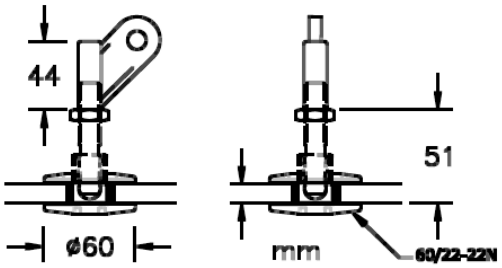

Dimensions

DETAILS

One Way Tie Rod to Glass Bracket

- Suitable for 10/12mm toughened glass & TR12 tie rods
- Ø27mm Hole required in glass
- Email luke.pritchard@mfgs.com.au to order or discuss your requirements

FINISHES

- Satin

Base material: 316 Stainless Steel

MFGS
MODERN FRAMELESS GLASS SYSTEMS
customer.service@mfgs.com.au
www.mfgs.com.au

FRAMELESS GLASS CANOPY HARDWARE — CGF443

Product Image

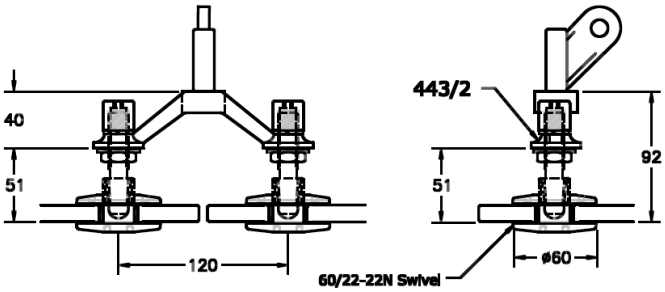

Dimensions

DETAILS

Two Way Tie Rod to Glass Bracket

- Suitable for 10/12mm toughened glass & TR12 tie rods
- Ø27mm Hole required in glass
- Email luke.pritchard@mfgs.com.au to order or discuss your requirements

FINISHES

- Satin

Base material: 316 Stainless Steel

FRAMELESS GLASS CANOPY HARDWARE — CB1235

Product Image

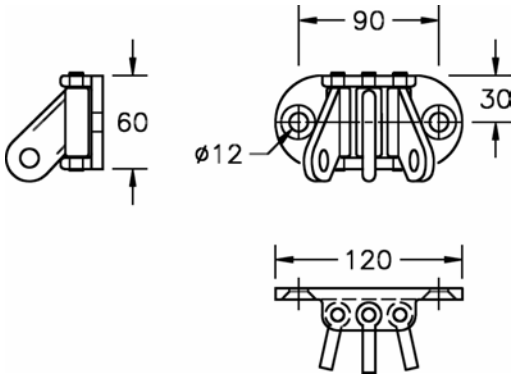

Dimensions

DETAILS

Three Way Wall to Tie Rod Bracket

- Suitable for TR12 Tie Rods
- Email luke.pritchard@mfgs.com.au to order or discuss your requirements

FINISHES

- Satin

Base material: 316 Stainless Steel

customer.service@mfgs.com.au
www.mfgs.com.au

MFGS
MODERN FRAMELESS GLASS SYSTEMS

TR12 FRAMELESS GLASS CANOPY HARDWARE

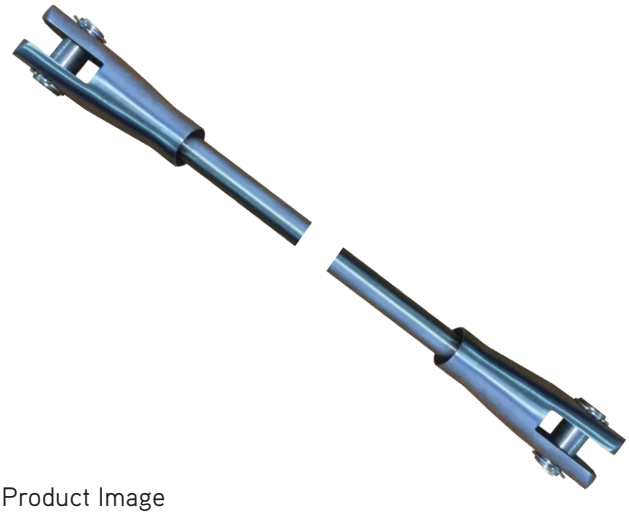

Product Image

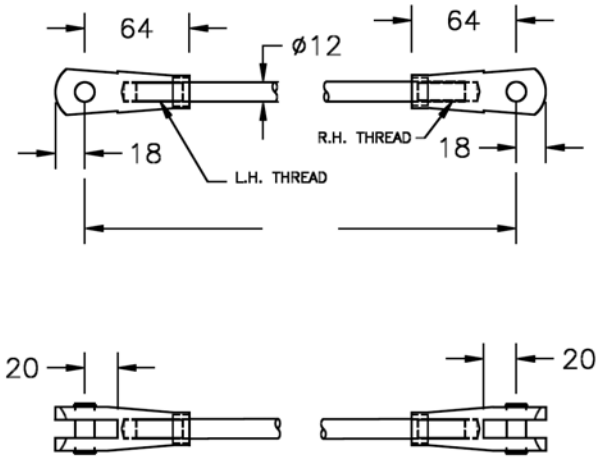

Dimensions

DETAILS

Tie Rod with Forks

- Suitable for CB1235, CGF443, CGF220, CB1234 & CB523
- Email luke.pritchard@mfgs.com.au to order or discuss your requirements

FINISHES

- Satin

Base material: 316 Stainless Steel

MFGS
MODERN FRAMELESS GLASS SYSTEMS
customer.service@mfgs.com.au
www.mfgs.com.au

FRAMELESS GLASS CANOPY HARDWARE

Heavyweight Spider Canopy

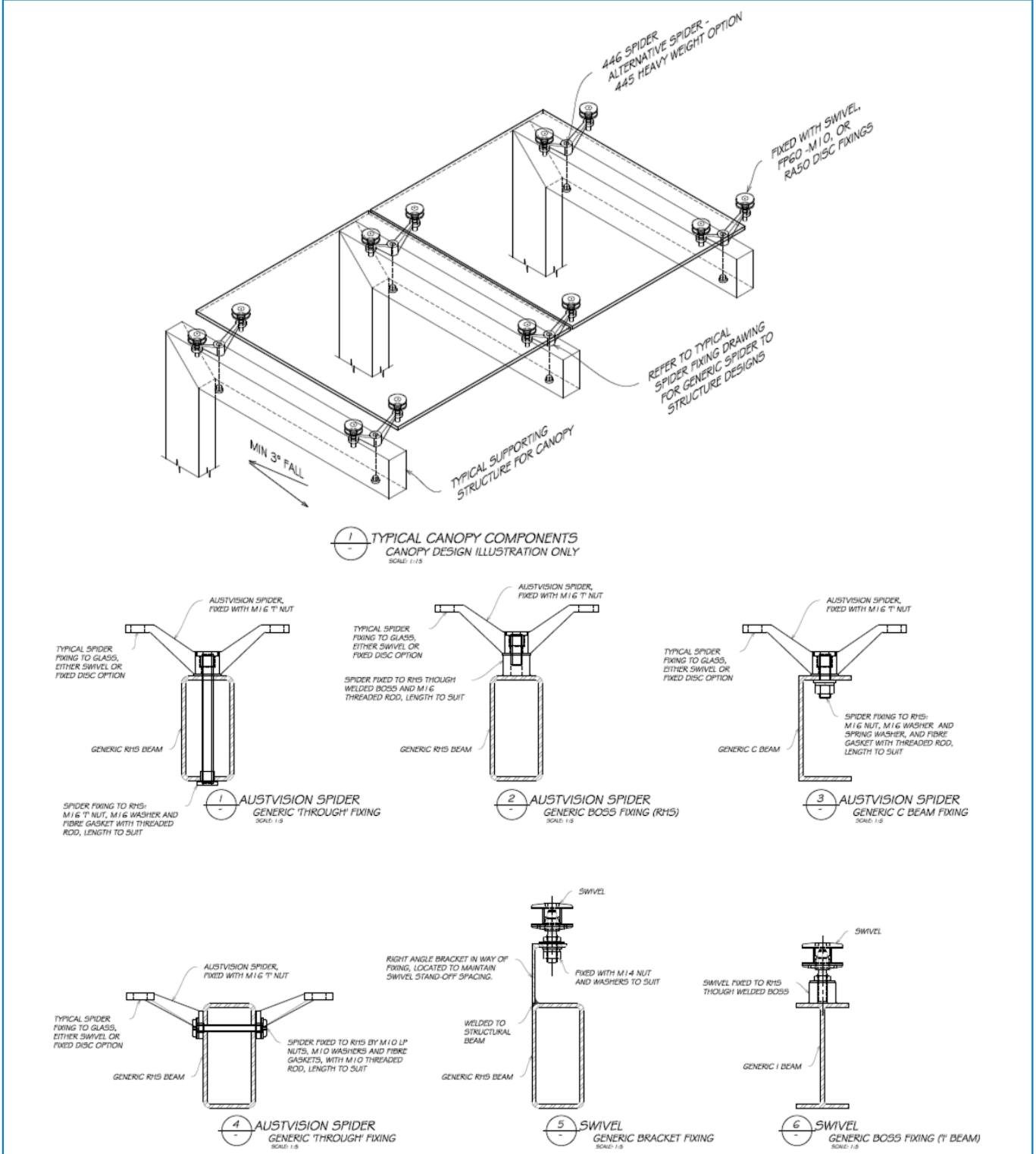

DETAILS

Austvision Frameless Glass Heavyweight Spider Canopy

- Suitable for 10 to 19mm toughened glass & 11.5 to 22mm toughened laminated
- 445 or 446 series – four or two way heavy duty spider fittings
- Glass fixings - M10 CSK Disc or 60/22-22n swivel disc to suit the application
- Email luke.pritchard@mfgs.com.au to order or discuss your requirements

FINISHES

- Polished
- Satin

Base material: 316 Stainless Steel

customer.service@mfgs.com.au
www.mfgs.com.au

MFGS
MODERN FRAMELESS GLASS SYSTEMS

Lightweight Spider Canopy

FRAMELESS GLASS CANOPY HARDWARE

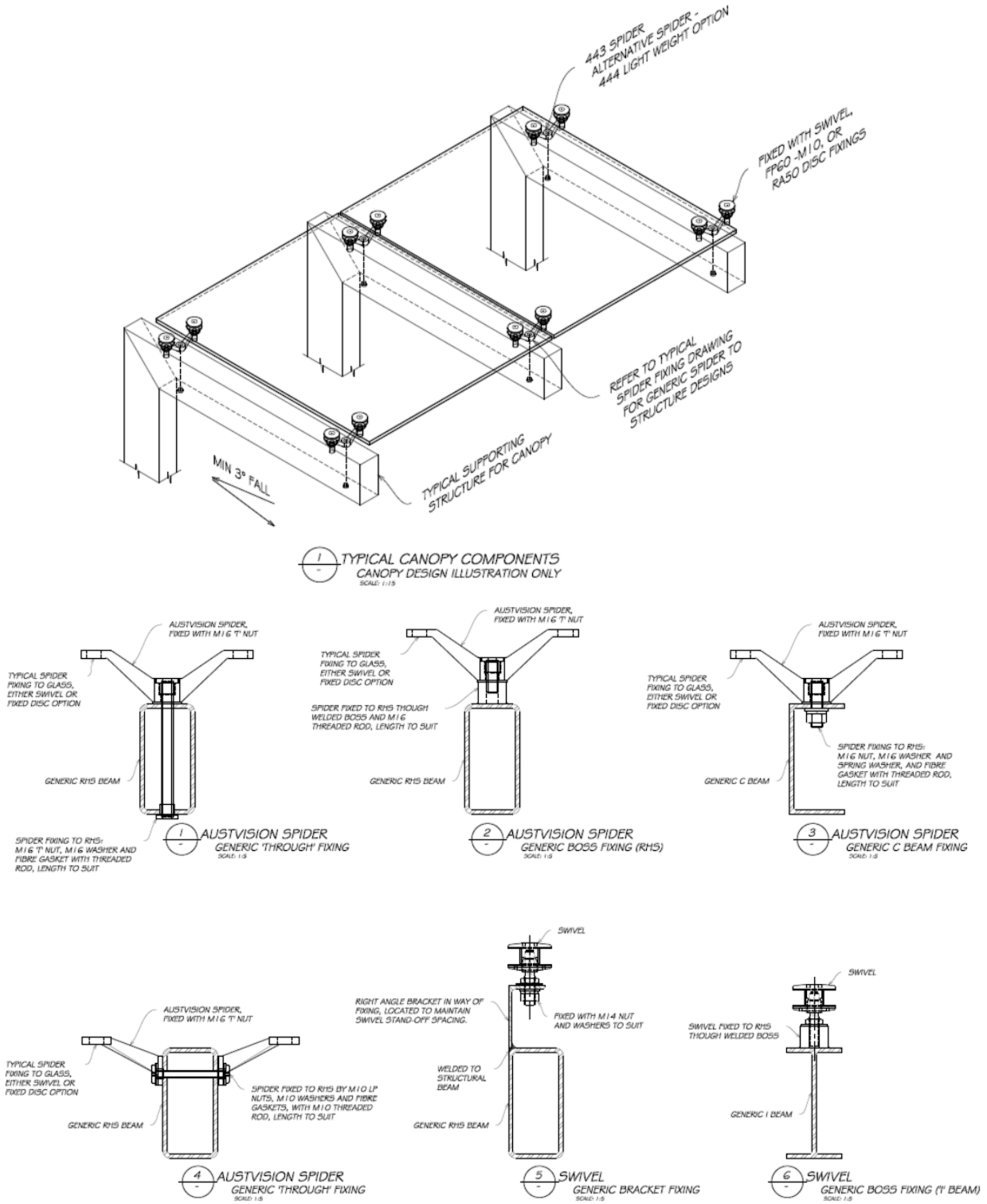

DETAILS

Austvision Frameless Glass Lightweight Spider Canopy

- Suitable for 10 to 19mm toughened glass & 11.5 to 22mm toughened laminated
- 443 or 444 series – four or two way light duty spider fittings
- Generic drawings above show M16 fixing methods for 445 & 446 series spiders, M10 fixings are used for 443 & 444 series spiders.
- Glass fixings - M10 CSK Disc or 60/22-22n swivel disc to suit the application
- Email luke.pritchard@mfgs.com.au to order or discuss your requirements

FINISHES

- Polished
- Satin

Base material: 316 Stainless Steel