EDSON HOT WATER over 60 years IN AUSTRALIA

edson solar

Solar Evacuated Tubes

- 3 Models: Classic, Reflective and Compact
- Increase the efficiency of your existing system
- Longlife Anodised Aluminium Frame and Casing
- 42mm Header to minimize pressure loss
- 2mm thick Evacuated Tube
- Generous Government rebates still apply*

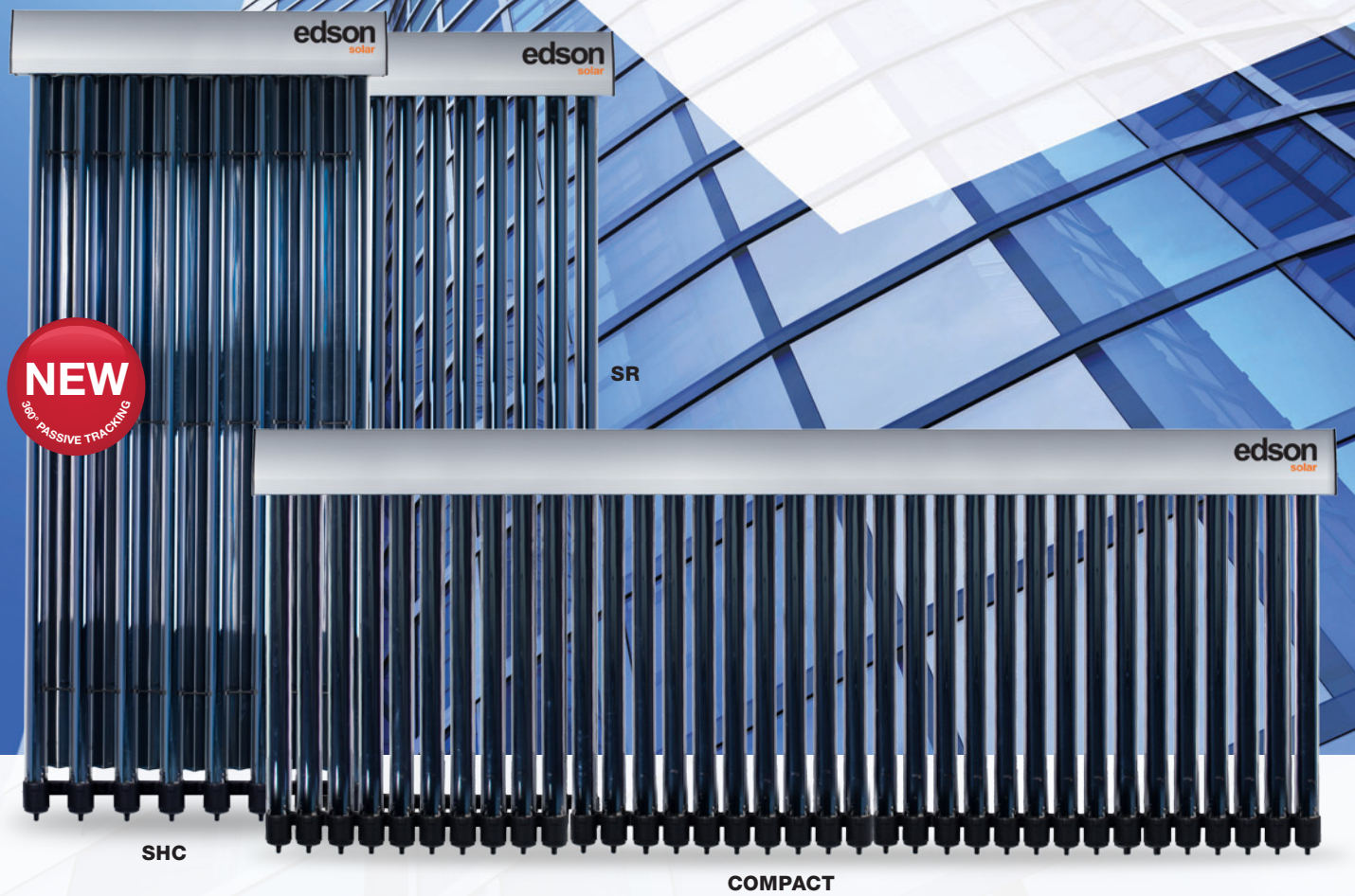

1300 880 154 | edson.com.au

* If installed as an approved complete system using edson components.

15 YEAR COLLECTOR WARRANTY

EDSON EVACUATED TUBE CONSTRUCTION

Edson have been supplying Solar Collectors in the Australian market for over 20 years and it is this experience in the solar industry that has lead us to supply Evacuated Tube Technology as our preferred technology. Edson collectors all use a 42mm header pipe to ensure minimal pressure loss through your commercial system, allowing more collectors in series and effective thermosiphon capabilities in residential applications. Unlike other suppliers Edson Solar currently have three types of Evacuated Tube Collectors in the range.

REFLECTIVE COLLECTOR

Our **New SHC Evacuated Tube Solar Collector (Reflective)** is the first on the Australian market to provide 360 degree passive tracking. Utilizing premium grade, highly polished, self cleaning reflective aluminium and click and connect installation technology, Edson Solar are the first to successfully introduce next generation evacuated tube reflector technology in a modular, easy to install format. With an increased collector output on a reduced collector footprint the SHC is the collector of choice when dealing with limited roof space on commercial buildings or residences that have already committed to PV or have architectural limitations.

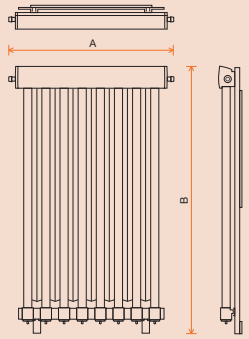

REFLECTIVE	14	20
A Width	1,570mm	2,230mm
B Height	2,000mm	2,000mm

CLASSIC COLLECTOR

The **SR Evacuated Tube Solar Collector (Classic)** is the stalwart of our range, with proven performance based on sound design the SR collector maximises flow and heat exchange making it suitable for both residential and commercial installations. With an industry benchmark 2mm thick glass tube and a 24mm heat exchange bulb our standards begin where others stop.

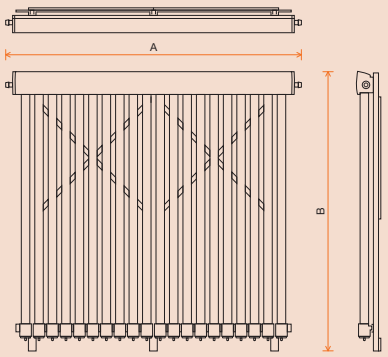

Combinations are used for more than 30 tubes

CLASSIC	10	20	30
A Width	880mm	1,635mm	2,375mm
B Height	2,000mm	2,000mm	2,000mm

COMPACT COLLECTOR

The **SR Evacuated Tube Solar Collector (Compact)** is perfect for thermosiphon installations where the collector needs to be positioned below a roof mounted tank and the necessary space is not available. With architectural roof space creating challenges for the provision of services the compact provides you with even more flexibility when planning your commercial or residential install.

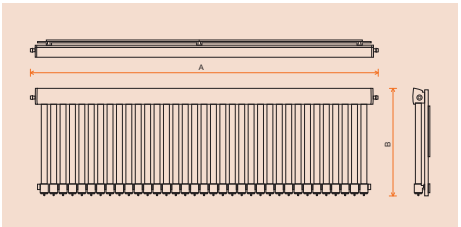

COMPACT	35 Only
A Width	2,570mm
B Height	1,000mm

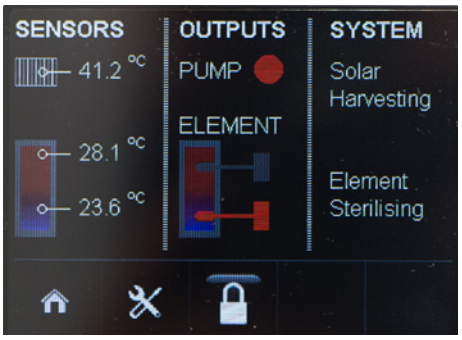

Optional internal touch control available available

edson

Sales: 1300 880 154 | Service 1300 303 779
Fax: + 61 3 9548 5176 | P.O. Box 5008, Cheltenham East, VIC 3192
Email: sales@edson.com.au | www.edson.com.au | ABN 63 606 991 897

E126V1280815